ATLAS Vacuum Pupms

2X/2XZ SERIES ROTARY VACUUM PUMP

Atlas

2X Series Rotary Vane Vacuum Pump

Applications:

2X Rotary Vacuum Pump is designed to work either as a pre-stage pump or as an independent vacuum device . Widely used in petroleum, chemical, pharmacy industries and so on.

2X Series Tech. Data

Model		2X-2A	2X-4A	2X-8A	2X-8	2X-15A	2X-15	2X-30A	2X-70A
Capacity L/S		2	4	8		15		30	70
Ulti. Pres. (Pa)	Shut Gas Ballast	$\leqslant 6\times10^{-2}$							
	Open Gas Ballast	$\leqslant 6\times10^{-1}$				$\leqslant 1.33$			
Total Ulti. Pres. (Pa)		-3				$\sim 6\times10^{-1}$			
Motor Power (Kw)		0.37	0.55	1.1		1.5		3	5.5
Temp. Incr. ℃		$\leqslant 40$							
Noise Level dB (A) LW		68	≤68	≤70		≤75		≤78	≤80
Inlet Dia. (mm)		25	25	40		40		65	80
Speed r/min		450		550	320	320		450	420
Oil Consumption L		0.7	0.7	2	0.8	2.8		2	4.2
Overall Dimension m		46×28×35	55×34×41	79×43×54		79×53×54		78×50×56	91×65×70
Weight Kg		53	76	158		202		236	338
Cooling Mode		Air			Water	Air	Water		
Cooling Water L/min					>0.5		>0.8	>1	>2

Atlas

CONSTRUCTION

SN	2X-2A/4A/8/15	2X-30A/70A
1	Inlet	Body
2	Strainer	Vane
3	Exhaust Port	Rotator
4	Oil Inlet	Spring
5	Oil Outlet	Baffle
6	Vane	Oil Outlet
7	Spring	Gas Ballast Controller
8	Rotator	
9	Gas Ballast Controller	
10	Body	
11	Baffle	
12	Exhaust	

2X-2A/4A/8/15

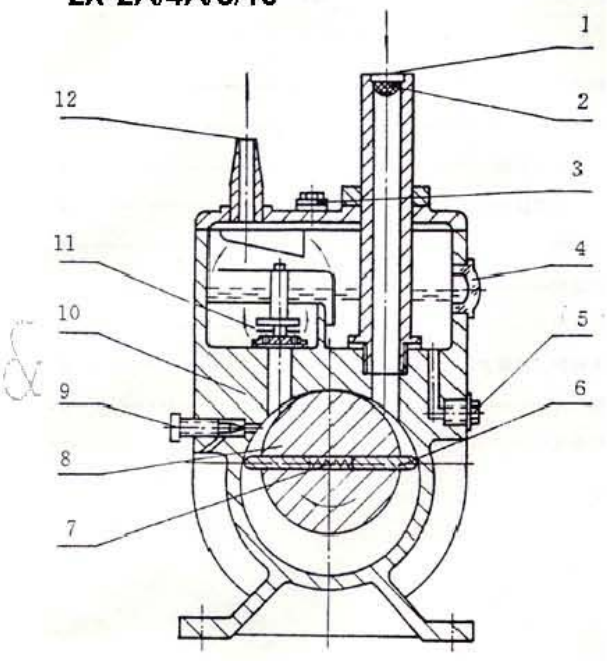

Performance Curves:

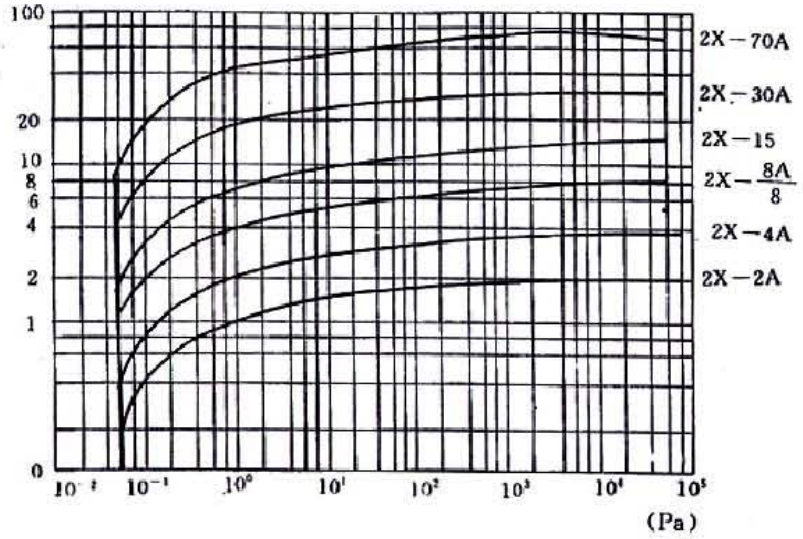

2X-30A/70A

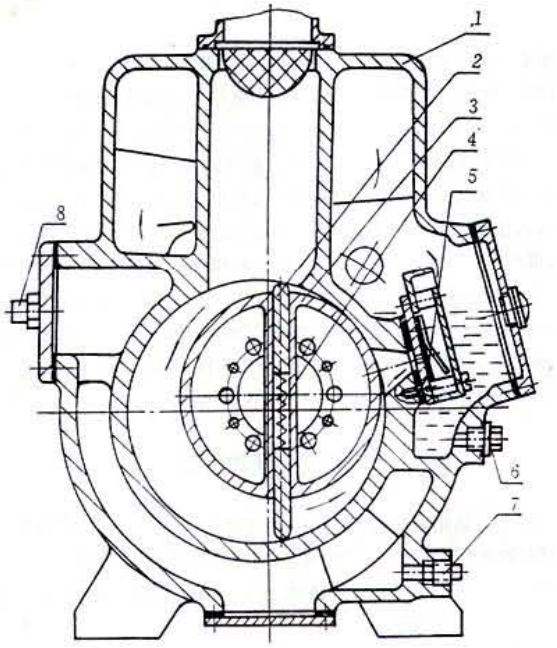

Installation & Overall Dimensions:
2X-2A/4A/8A/8/15

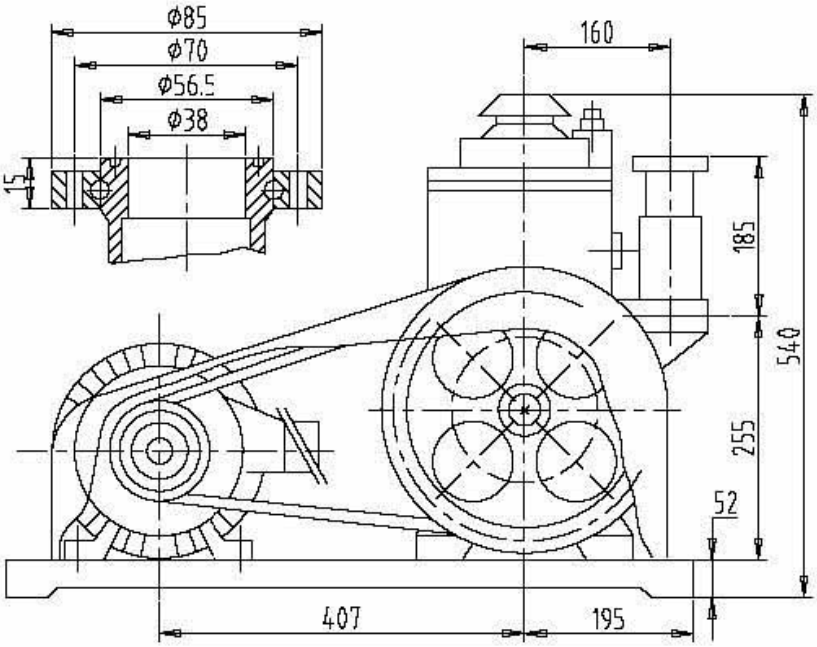

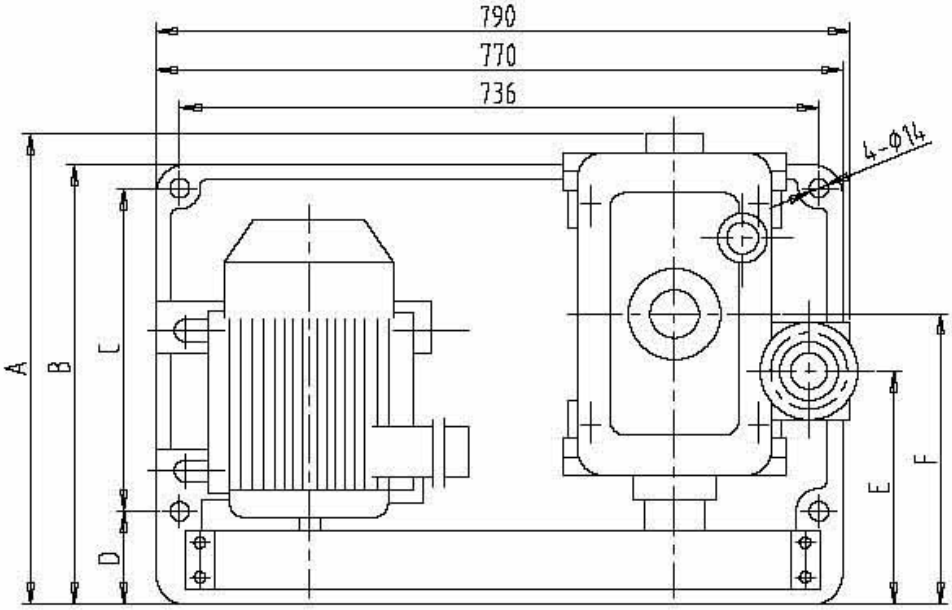

Dimensions:

Model	A	B	C	D	E	4-φ
2X-2A	350	280	240	460	436	φ10
2X-4A	410	340	200	550	480	φ10
2X-8A	440	430	200	550	480	φ10
2X-8	430	384	260	104	215	F 274
2X-15	531	484	356	110	261	F 324

Installation & Overall Dimensions:
2X-30A/70A

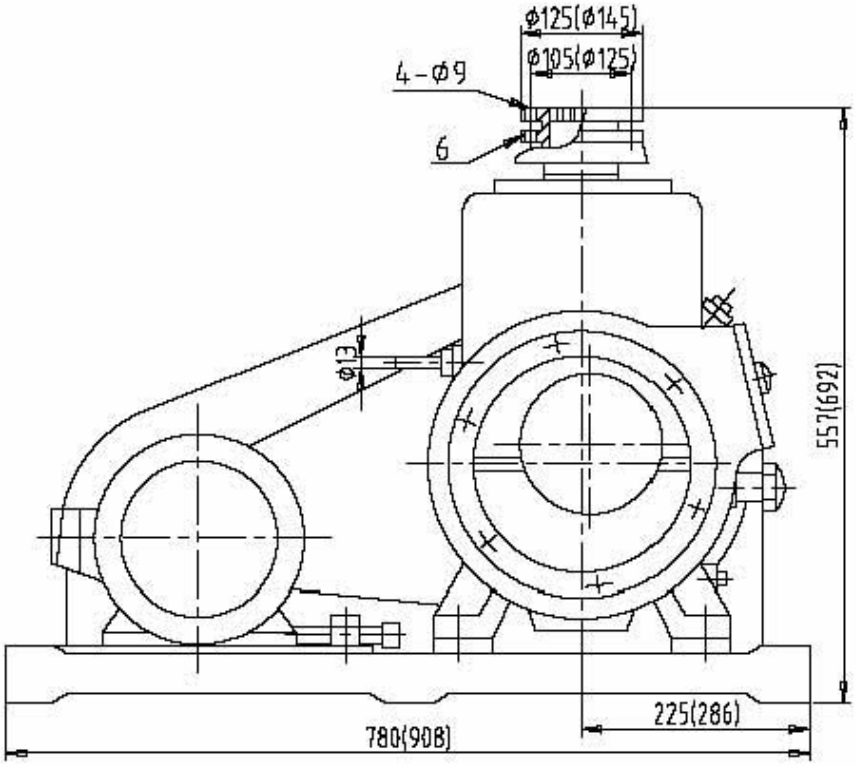

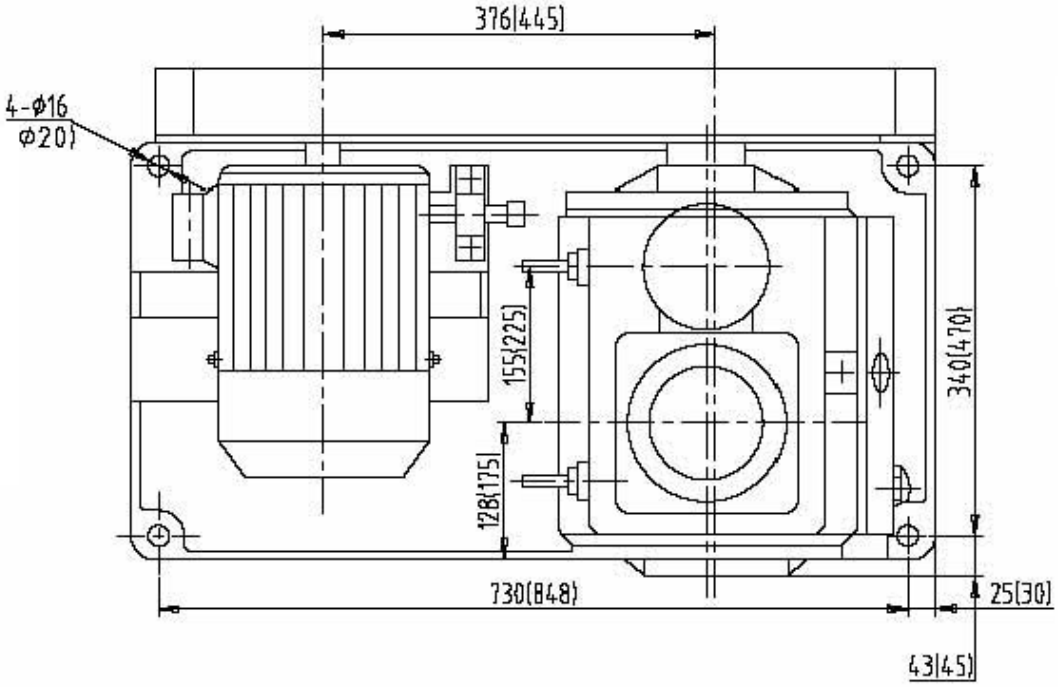

Atlas

2XZ Series Double Stage Rotary Vane Vacuum Pump

Unique Structure
Adopting production technology of Model DUO 0168B Introduced from Balzers Corp. Switzerland in 1992 Small Dimensions.

Low Noise.
Immersing motor and pump body together in oil bath, Eliminating oil leak thoroughly.

The Location of the Discharge pipe can be changed from vertically to horizontally or vice only by changing . The installation Mode of the inlet. Equipped with sate valves and venting valves. Allowing automatic air-admission when the pump stops Running, preventing oil contamination to vacuum system and facilitating vapor removal.

TECHNICAL DATA

Item / Model		Unit	2 x Z-2B	2XZ-2C1	2XZ-4B	2XZ-4C1	2XZ-8D	2XZ-15D
Volume flow rate		L/S(m^3/h)	2.3(8)	2.3(8)	4.5(16)	4.5(16)	9(34)	18(68)
Ultimate pressure	Partial. (without gas ballast)	Pa	2×10^{-2}	2×10^{-2}	2×10^{-2}	2×10^{-2}	2×10^{-2}	2×10^{-2}
	Total. (without gas ballast)	Pa	6×10^{-1}	6×10^{-1}	6×10^{-1}	6×10^{-1}	6×10^{-1}	6×10^{-1}
	Partial.(with gas ballast)	Pa	6×10^{-1}	6×10^{-1}	6×10^{-1}	6×10^{-1}	6×10^{-1}	6×10^{-1}
	Total. (with gas ballast)	Pa	9×10^{-1}	9×10^{-1}	9×10^{-1}	9×10^{-1}	9×10^{-1}	9×10^{-1}
Water Vapor capacity		g/h	360	360	700	700	570	1150
Noise (without gas ballast)		dB (A)	65	65	65	65	70	70
Operating temperature		℃	90	90	90	90	90	90
Motor	Phase		3	single	3	single	3	3
	Voltage	V	380	220	380	220	220/380△/Y	220/380△/Y
	Power	Kw	0.37	0.37	0.55	0.55	1.1	1.5
	Rotating speed	r/min	1420	1420	1420	1420	1400	1400
Weight		kg	23	24	30	32	70	90

Atlas

2XZ Series Double Stage Rotary Vane Vacuum Pump

PERFORMANCE CURVES

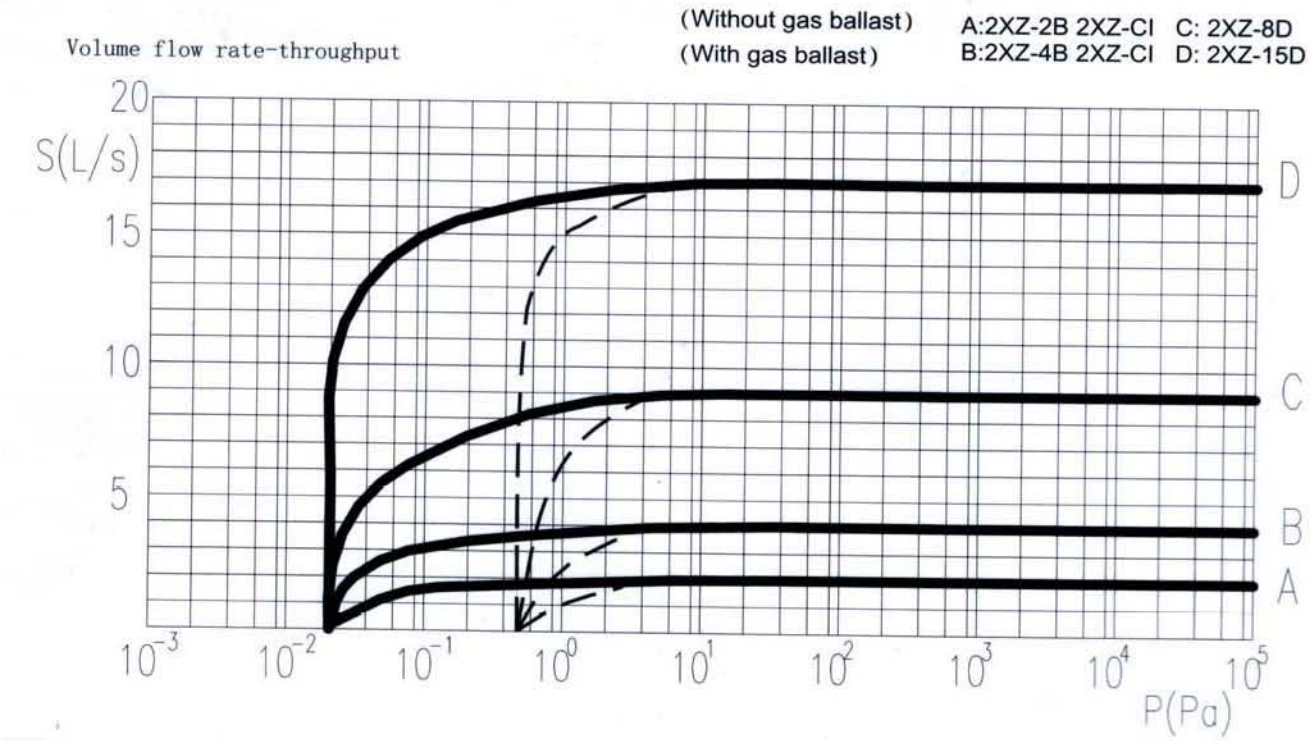

CONSTRUCTION

SN	Name
1	Suction Port
2	Strainer
3	Oil Baffle
4	O-ring
5	Spring
6	Vane
7	Rotator
8	Casing
9	Oil Box
10	Oil
11	Air Exhaust

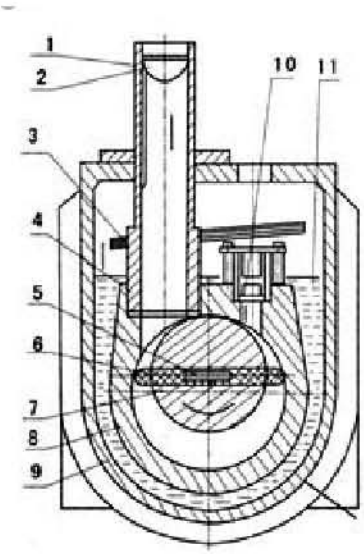

INSTALLATION DIMENSIONS

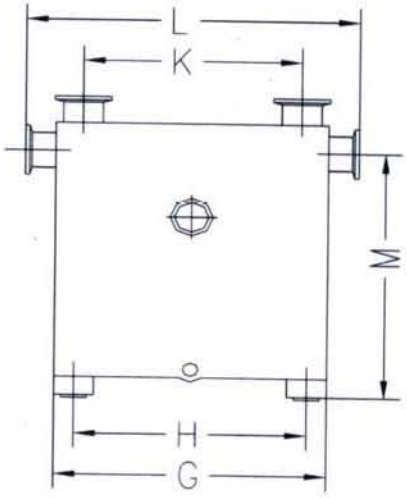

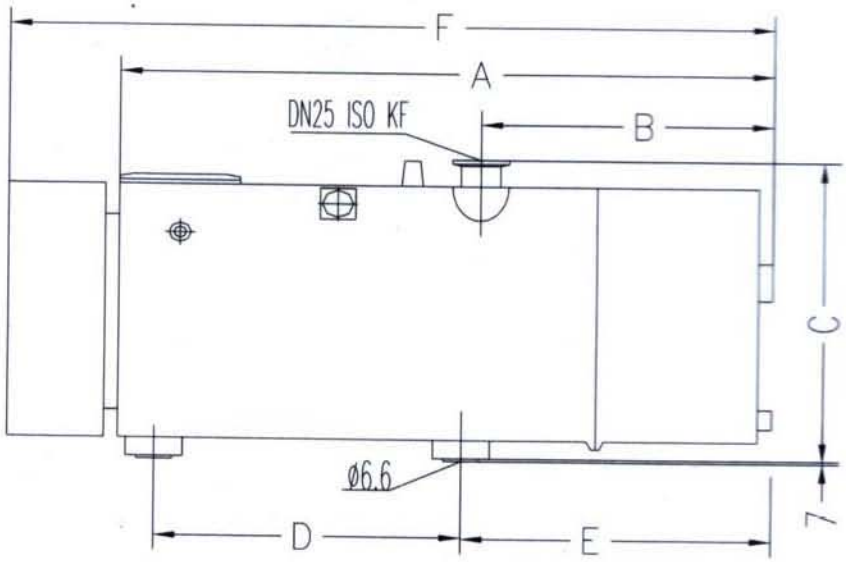

	A	B	C	D	E	F	G	H	K	L	M
2XZ-2CI	—	200	222	192	192	502	150	122	110	190	180
2XZ-4CI	—	206	244	216	198	538	192	164	152	232	200
2XZ-2B	424	200	222	192	192	—	150	122	110	190	180
2XZ-4B	460	206	244	216	198	—	192	164	152	232	200

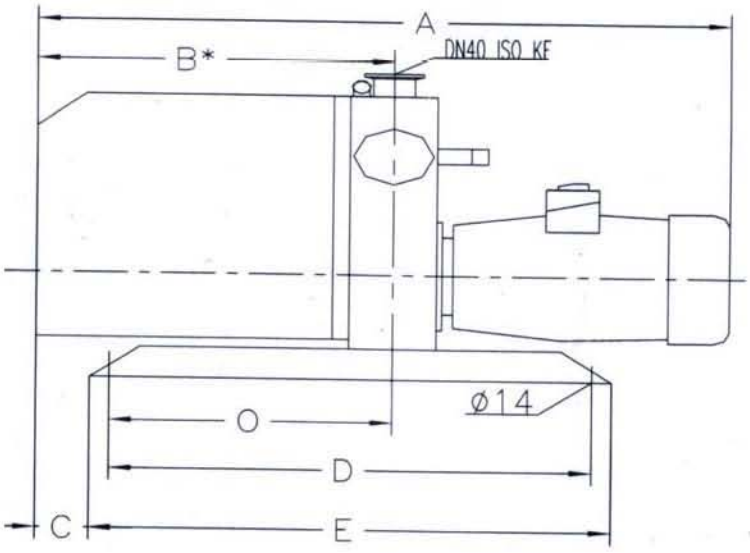

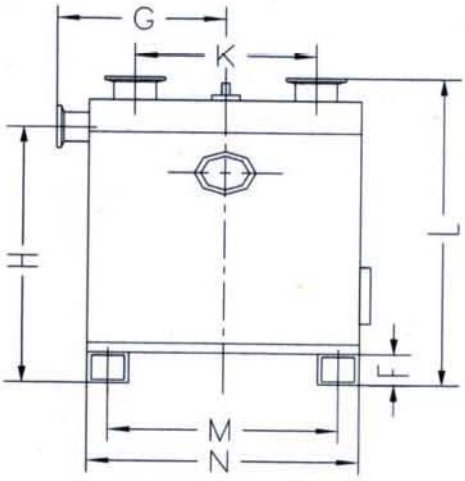

	A	B※	C	D	E	F	G	H	K	L	M	N	O
2XZ-8D	632	325	36	440	476	40	140	332	165	390	210	248	258
2XZ-15D	748	415	126	440	476	40	140	332	165	390	210	248	258